ERGOMART
SUPERIOR ERGONOMIC SOLUTIONS

INSTALLATION MANUAL

VIEWTRACK SYSTEM

READ BEFORE INSTALLATION - IMPORTANT SAFETY INFORMATION ENCLOSED

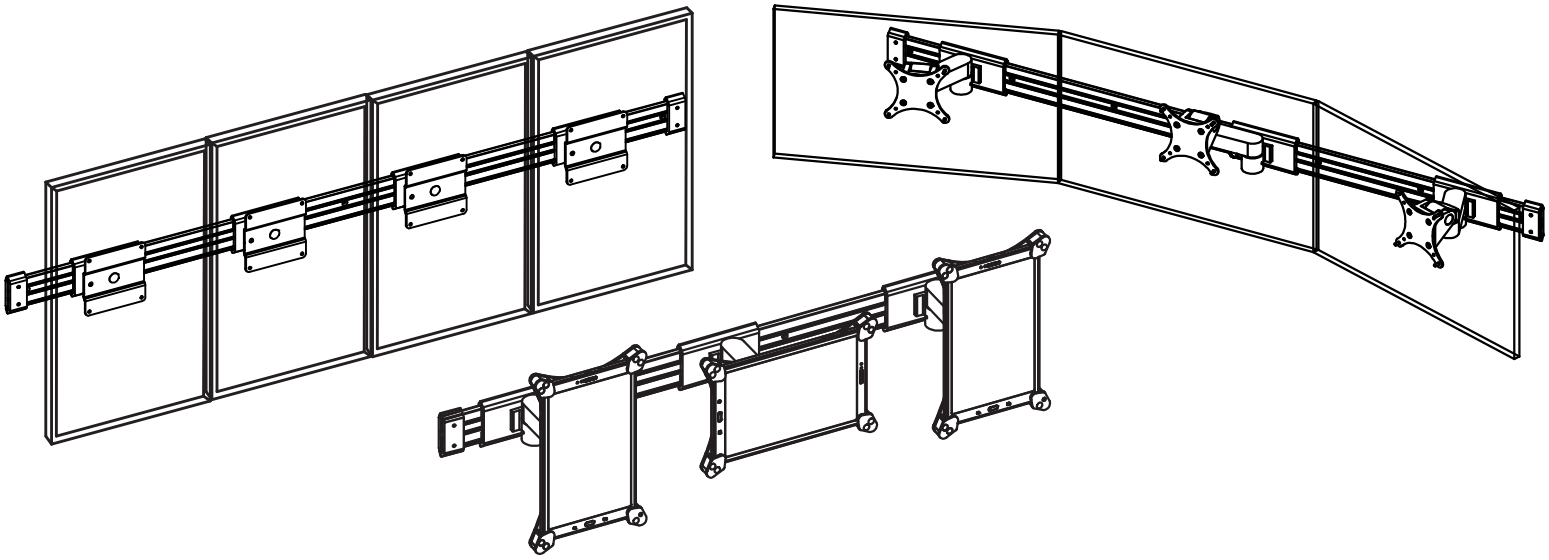

TABLE OF CONTENTS

SAFETY & LIABILITY

LIABILITY DISCLAIMER

Ergotect Corporation and its subsidiaries and brands, hereafter referred to as (EC), strive to create broadly comprehensible, complete and accurate information regarding our product installation documentation. Ongoing changes in suppliers, materials, designs, components, product upgrades, and other variables limit our ability to guarantee document accuracy. Furthermore, EC reserves the right to make changes and updates to product documentation and/or product design without notifying existing and new users. EC therefore does not guarantee completeness, accuracy or suitability of documentation and will not be held liable due to incomplete documentation, editorial errors, improper translation from English, or the comprehensibility of language or images or the ability of a user to understand any particular written instructions or interpret images contained herein and below.

EC disclaims any liability for damage to EC provided product, customer or user owned devices and equipment affixed to, used on or in conjunction with EC provided product, other property, or personal injury resulting, in whole or in part, from improper installation, modification, use or misuse of its products. EC disclaims all other warranties, express or implied, including warranties of merchantability and fitness for a particular purpose. EC is not responsible for incidental, special or consequential damages, including but not limited to, inability to use EC products or costs incidental to the installation or removal of defective or serviceable EC products or components.

WARRANTY CONDITIONS

The VIEWTRACK is backed with a 5 year limited warranty during which time we will repair or replace any component shown to have a material or manufacturing defect. Components that are subject to wear and degradation based on duty cycles and usage may be subject to prorating. The VIEWTRACK is designed for use in a single shift, 5 day work week environment. It is designed for repositioning of components up to 5 times per shift.

USER SAFETY PRECAUTIONS

- This product is intended for indoor use only.
- NEVER exceed weight limit – See payload maximum for slider mounts in **Appendix A.**
- NEVER exceed 30 pounds per linear foot of track – See **Appendix A** for details.
- DO NOT remove safety and warning labels and stickers.
- DO NOT lean on equipment.
- DO NOT hang from or pull downward on equipment.
- DO NOT mount the track using glues, tapes, Velcro^{tm}, or any other adhesive systems.
- DO NOT mount to unbacked drywall or gypsum board using drywall screws.
- DO NOT mount to (backed or unbacked) drywall or gypsum board using plastic ribbed anchors or screw-in anchors.

VIEWTRACK INSTALLATION PREPARATION OVERVIEW

RECOMMENDED EQUIPMENT

These items will typically be needed for correct installation:

- Pencil
- Level
- Cordless or Corded Power Drill
- Drill Bit Set
- Driver Bit Set
- Rubber Mallet or Dead Blow Hammer
- Tape Measurer
- Ladder or Stepstool
- Stud Finder

The ViewTrack is optimized for mounting using Snaptoggle® BA-10-24 and #10-24 (3/16"-24) countersunk machine screws into sheetrock that is at least 1/2" thick. Equivilent or higher strength substrate is acceptable. Attachment to wooden or metallic studs is not a neccessity.

- **PRE-INSTALLATION PREPARATION:**

  - o Clear installation space of clutter and items that could create a hazardous work area.
  - o Know the dimensions of all components and devices to eliminate interference.
  - o Check for operational clearance for all components and users. Doors, adjacent walls, walkways, furniture, fixtures, and electrical panels are some of many potential obstructions and hazards.
  - o Verify the space behind the fastening point is not obstructed by electrical, plumbing, HVAC, gas lines or other equipment before drilling into any surface.
  - o Determine the spacing and location of studs if they are present.
  - o Note wire management needs such as locations of networking ports and outlets so that device wiring does not hamper slider operation.
  - o Evaluate substrate age, thickness, and condition before mounting to ensure longevity of your system as well as your wall.
  - o Inspect your system periodically, checking for abnormal wear on the wall, loose fasteners and bending of the ViewTrack.

VIEWTRACK MOUNTING POSITION REQUIREMENTS

After determining the general mounting location and performing the steps required for **pre-installation preparation**, read and understand the below requirements for all ViewTrack mounting configurations.

- The Snaptoggles®, Machine Screws, & Wood Screws are included with each track.
- This product is optimized to be mounted using the Snaptoggle® Toggle bolt and #10 machine screws.
- If wooden/metallic studs are present, follow the guidlines for positioning as shown in **Figure 1 & 2** below. ALWAYS fasten close to stud center or more than 1" away from stud edge.
- Ideal mounting configurations provide several attachment points into wood studs or plywood backer and utilizes the snaptoggles where no substantial backer exists. See **Figure 3 & 4**.
- Wood screws must penetrate through entire ¾ inch plywood backer or a full inch into a wood stud.
- When no wood stud or wood backer attachment points are available due to the required lateral alignment of the track, use Snaptoggles at all mounting points. See **Figure 5**.
- When a wood backer is available and is ¾" thick or greater – follow the guidelines shown in **Figure 6 & 7**.
- When thin gauge metal studs are present – follow guidelines accompanying **Figure 8 & 9**.
- A pilot hole must always be drilled prior to fastener use. Pilot Hole depth must equal the length of the fastener. The size of the pilot hole should always be:
  - o 1/2" Diameter for Snaptoggle® & Machine Screw.
  - o 3/32" Diameter for Wood Screw.

ALL PRE-DRILLED FASTENER LOCATIONS MUST BE UTILIZED.

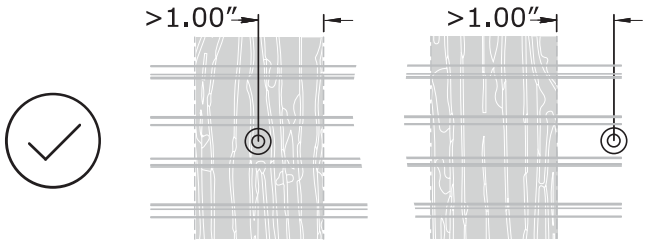

Fig. 1: Correct Mounting Positions.

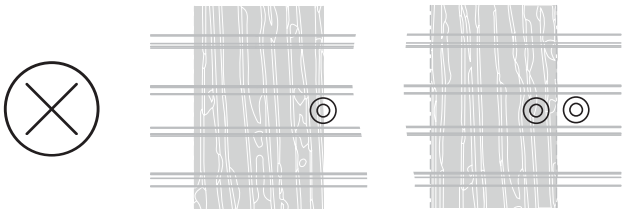

Fig. 2: Incorrect Mounting Positions.

HVT-27: 27in ViewTrack

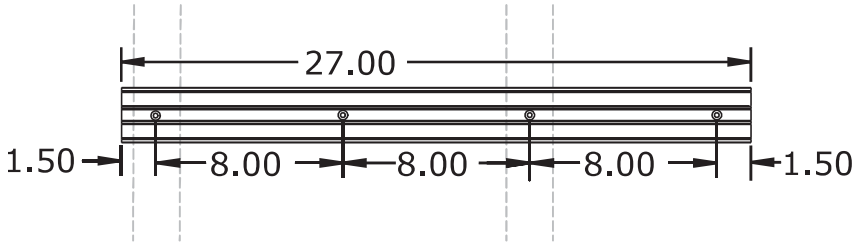

Fig. 3: Example hole alignment on wood studs centered at 16". Provided Snaptoggles are used to attach to drywall and wood screws attach to studs.

HVT-51: 51in ViewTrack

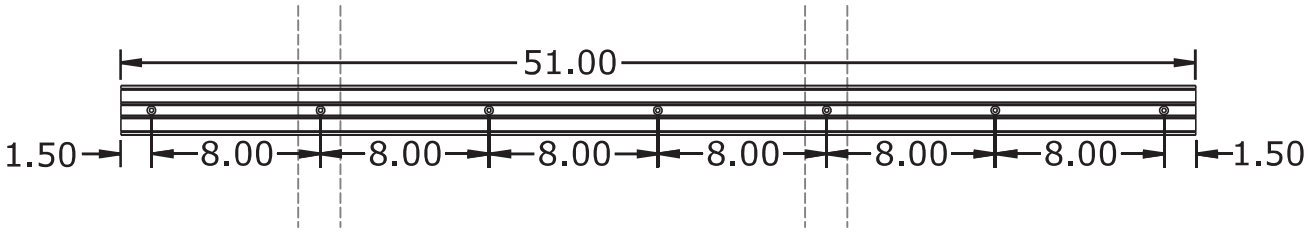

Fig 4: Example hole alignment on wood studs centered at 24". Provided Snaptoggles are used to attach to drywall and wood screws attach to studs.

VIEWTRACK INSTALLATION SURFACE MOUNTING CONDITIONS

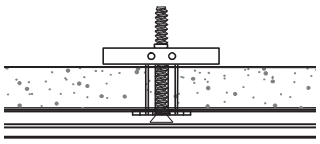

Fig. 5

- **UNBACKED SHEETROCK:**
  - Use included Snaptoggle® hardware.
  - Ensure sheetrock is correctly attached to framing and structure.
  - Ensure sheetrock creates a flat mounting surface and is not warped or bowed.

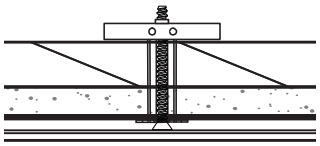

Fig. 6

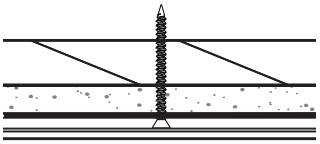

Fig. 7

- **SHEETROCK BACKED WITH A PLYWOOD BACKER**:
  - If plywood backer is thinner than 3/4", use included Snaptoggle® hardware as shown in **Figure 6**.
  - If plywood backer is 3/4" or thicker, use either the included #10 countersunk wood screws as shown in **Figure 7** or the included Snaptoggle® hardware.
  - Plywood or wood should be behind each attachement point.
  - Ensure sheetrock creates a flat mounting surface and is not warped or bowed.

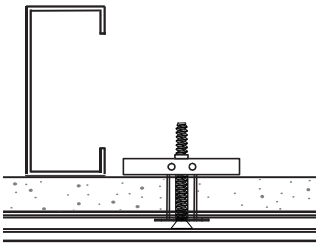

Fig. 8

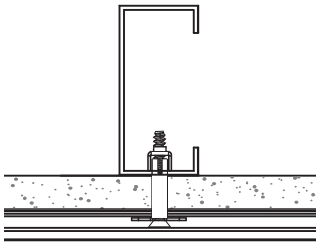

Fig. 9

- **THIN GAUGE METAL STUDS ALIGN WITH SOME FASTENING HOLES:**
  - Use included Snaptoggle® hardware or installer supplied #10 countersunk sheet metal screws.
  - Since drilling holes for toggles in thin gauge metal studs is difficult, alignment over unbacked sheetrock is preferred.
  - If attachment into metal stud centers is necessary, carefully align track so attachment holes are centered.
  - Ensure sheetrock creates a flat mounting surface and is not warped or bowed.
  - **WARNING** Care and accuracy are required when mounting Snaptoggles in to thin gauge metal studs. Only professional installation personnel or properly trained individuals should attempt to drill ½" holes into thin gauge metal studs as depicted in **Figure 9**.
  - **WARNING** The Snaptoggle arm spreads and then anchors into a vertical or near vertical orientation when the mounting hole is placed correctly at the center of the metal stud as depicted in **Figure 9**. Improperly placed holes can render the Snaptoggle useless and leave the intended mounting locations unusable. Shifting the rail laterally and re-drilling holes that leaves a complete set of unused holes can compromise the integrity of the sheetrock.

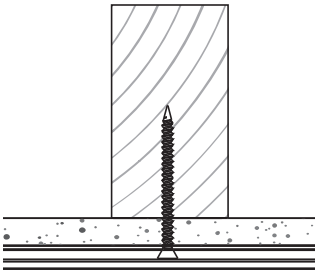

Fig. 10

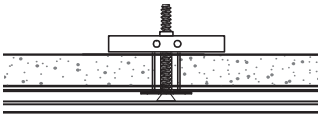

Fig. 11

- **WOOD STUDS ALIGN WITH SOME FASTENING HOLES**:
  - o Carefully align track so attachment holes are centered.
  - o Use supplied #10 countersunk wood screws when ViewTrack holes align with wood stud centers as shown in **Figure 10**.
  - o Use included Snaptoggles® for unbacked Sheetrock as shown in **Figure 11.**
  - o Ensure sheetrock creates a flat mounting surface and is not warped or bowed.

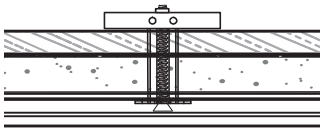

Fig. 12

- **SHEETROCK BACKED BY THIN GAUGE METAL BACKER (16 gauge or thinner):**
  - o Use included Snaptoggle® hardware.
  - o Ensure sheetrock is correctly attached to framing and structure.
  - o Ensure sheetrock creates a flat mounting surface and is not warped or bowed.
  - o Shift attachment holes to avoid studs if necessary.

OTHER UNSPECIFIED MOUNTING CONDITIONS

- The ViewTrack may be affixed to a variety of additional surfaces including **CMU, metal, masonry bricks, and concrete as well as many piers and poles.** Vertical surfaces of appropriate rigidity or surfaces backed by thicker gauge sheet metals may allow for different fasteners. Such fastening systems are to be specified by an architect or engineer.

- Other materials and substrates require specific solutions. Due to the variety of wall materials and building methods, we can only specifically recommend attachment methods for the above described conditions. In all other instances, determine the correct fastener for the job and if you are unsure, consult with a professional installer, home improvement store specialist or engineer. Prior to installation, ensure the surface, material, structure or member you wish to use for fixing will support the entire payload.

INSTALLATION & ASSEMBLY INSTRUCTIONS

1

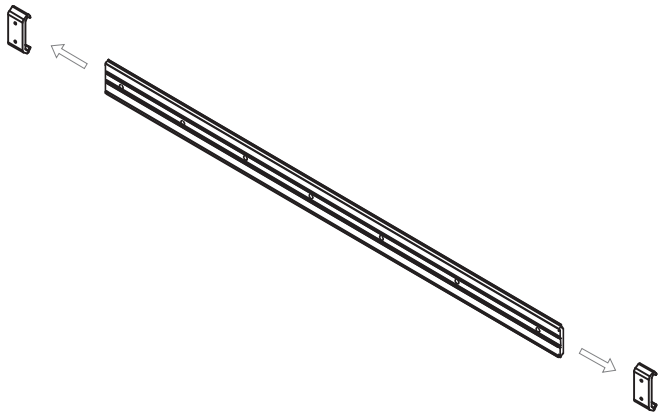

Remove end caps before beginning installation process.

2

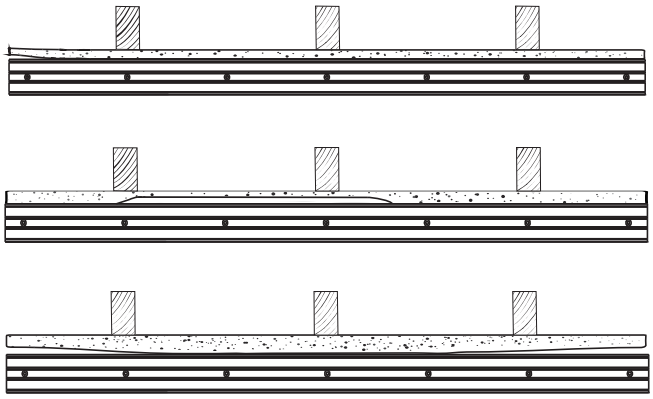

CHECK WALL FOR FLATNESS

WARNING: Inspect location for flatness. If a credit card easily slides beneath any point under the edge of the track proceed to **Appendix B on page 11**.

3

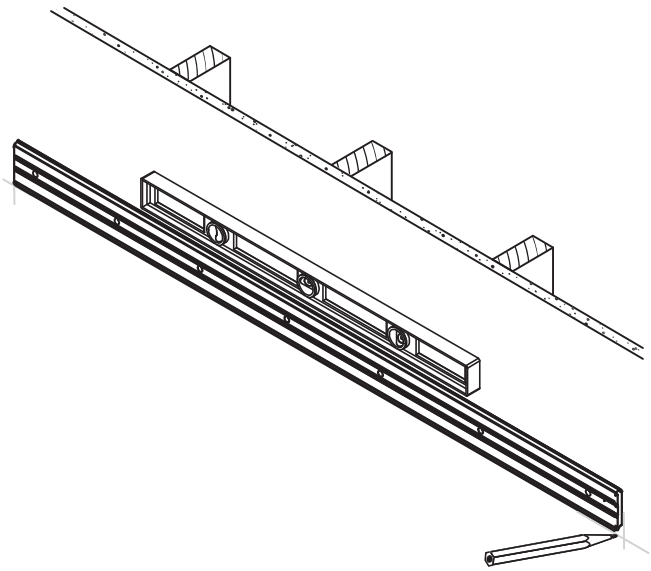

Level and Position Track in the generally desired mounting location. Mark with a pencil the lower edges of the track.

4

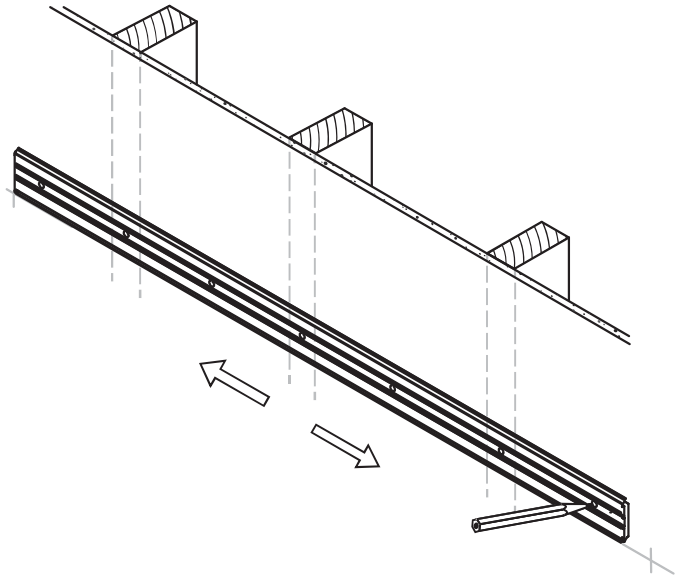

Determine optimal attachment points using the information on pages 3-5. Shift track needed and mark hole locations.

5

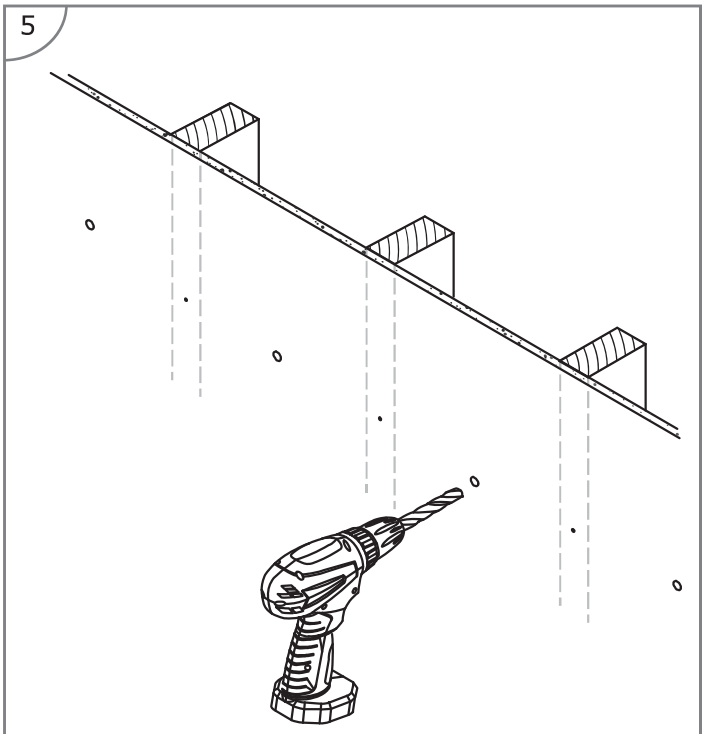

Drill 1/2” pilot holes for Snaptoggle locations. Drill 3/32” pilot holes for wood stud locations.

6

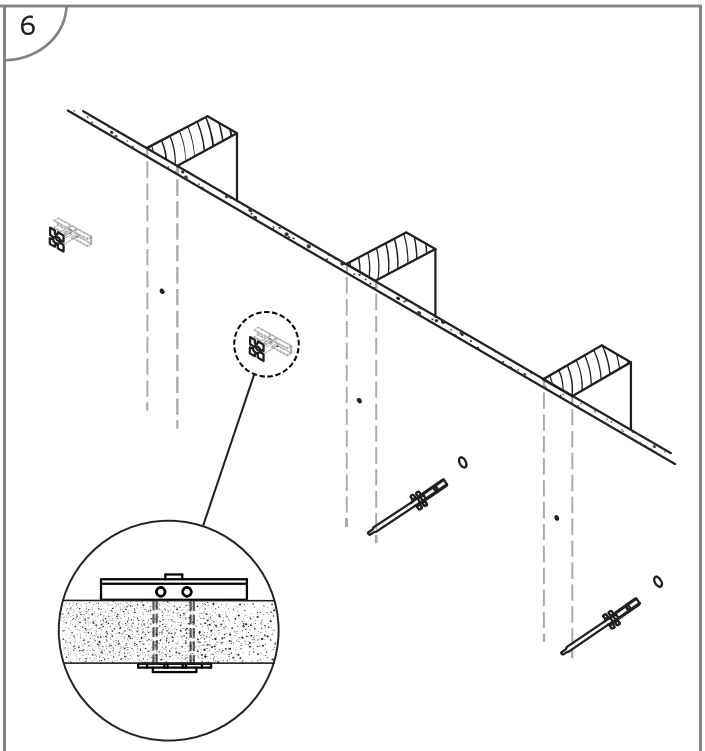

Insert toggles into the predrilled holes. (Visit **www.toggler.com** for detailed Snaptoggle® installation instructions).

7

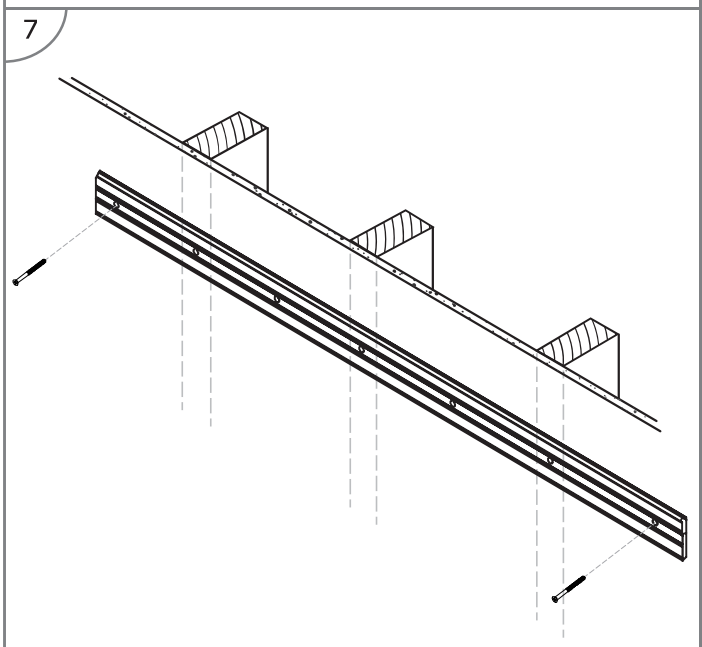

Insert Screws at both ends to ensure correct positioning. Finger Tighten only.

8

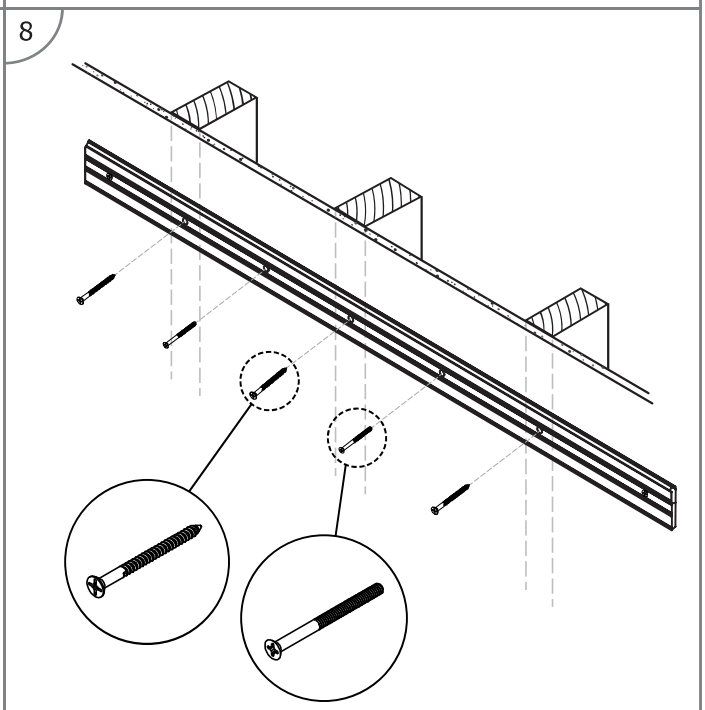

Insert appropriate fasteners in the remaining fastening locations. Tighten all screws snuggly using drill and bit driver. **ALL FASTENERS TO BE TORQUED TO APPROX. 30 IN*LBS.**

9

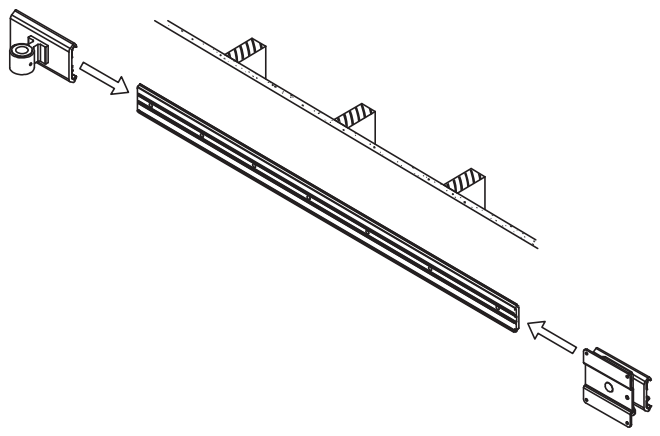

Guide sliders onto track from either end.
If using flush mount slider, complete Step 10D Prior to putting slider onto track.

10

Steps 10A-10D are for assembling the sliders and mounting a device.

10A

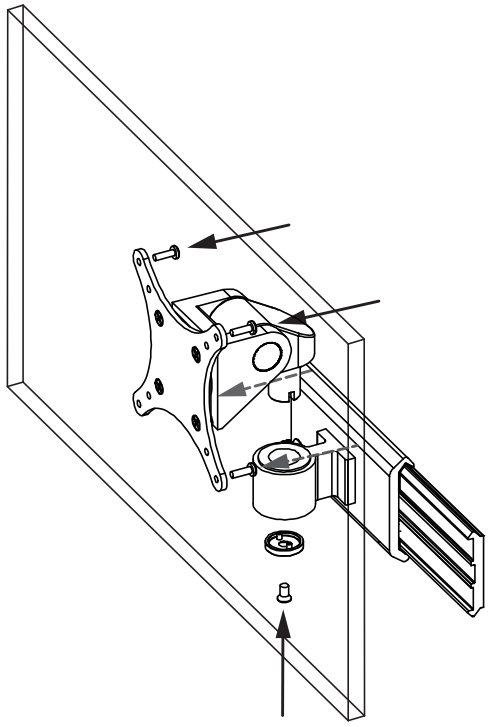

When mounting a device to a tilter head, assemble as shown above.

10B

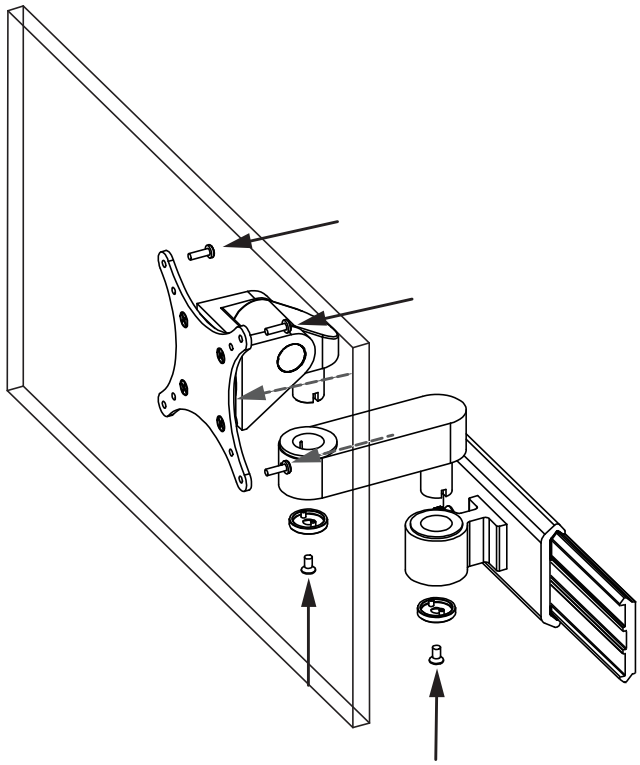

When mounting a device to a tilter head and an extension, assemble as shown above.

DEVICE MOUNTING INSTRUCTIONS

10C

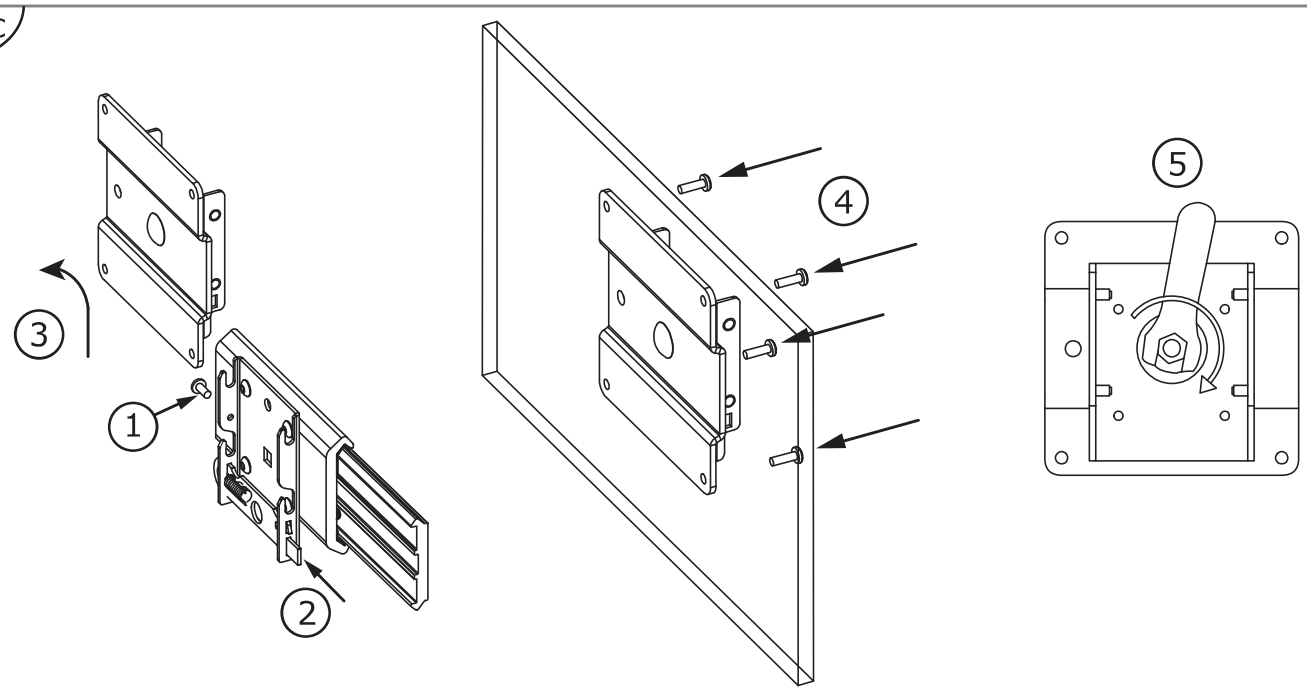

When mounting devices using a Monolok Quick Release Mount: **1)** Remove Security Screw, **2)** Depress latch, **3)** Lift up and out on front bracket, **4)** Attach front plate to device then, **5)** Adjust rotational resistance using the included wrench. Reattach Front plate to Slider.

10D

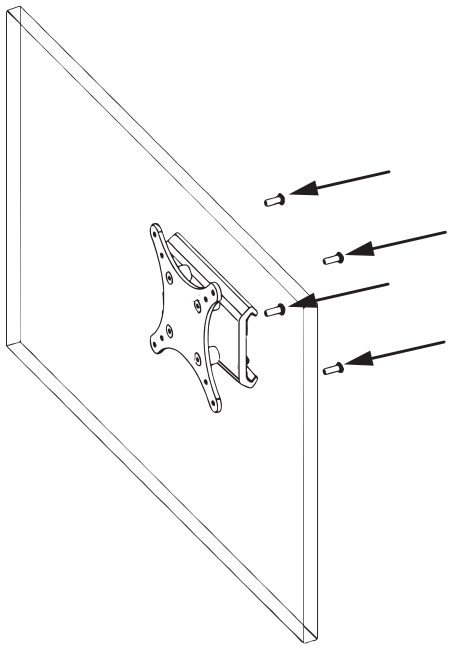

When mounting device using a Flush Mount, assemble as shown above. **Slide completed assembly onto track.**

11

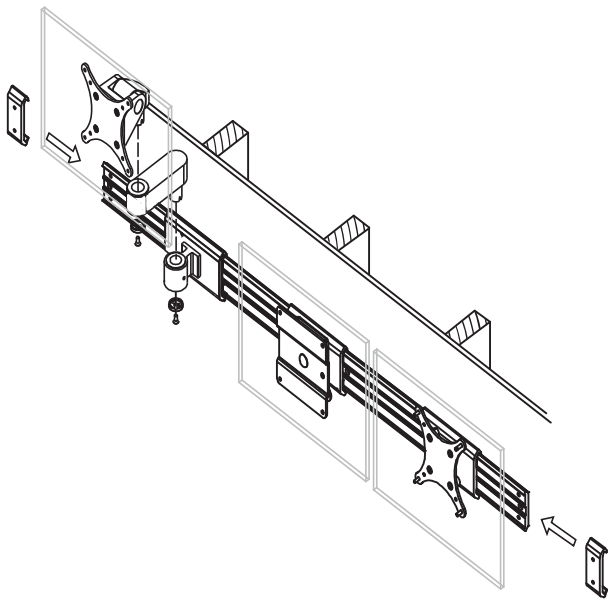

Once all devices and sliders are attached to track in their desired location, replace end caps and tighten set screws. Installation Complete.

Appendix A: Slider Weight Limits

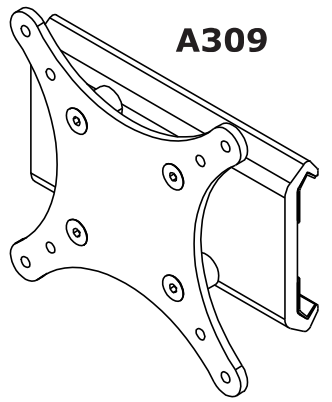

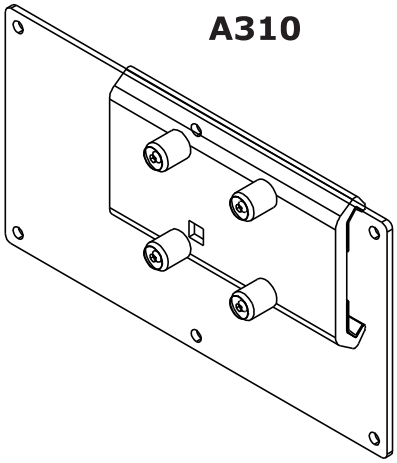

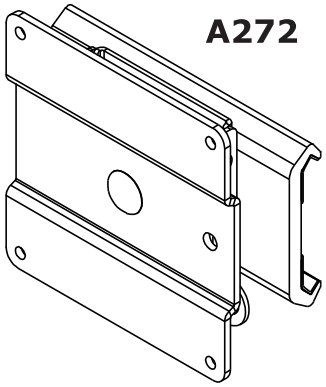

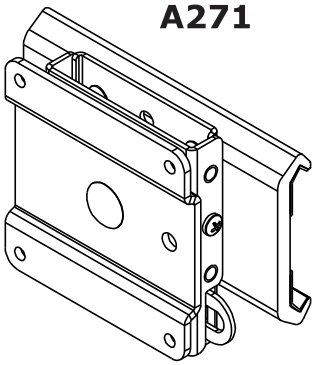

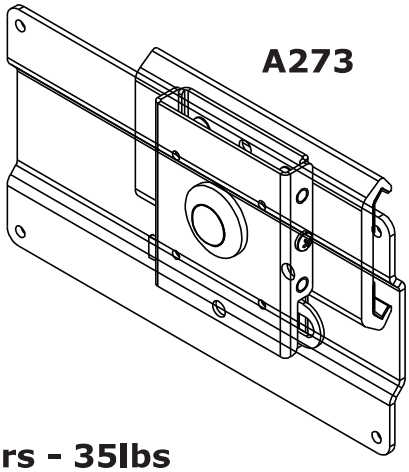

Max Payload For Low Profile Sliders - 35lbs

HVT001	HVT002	HVT003	HVT004
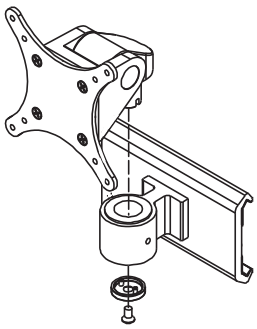	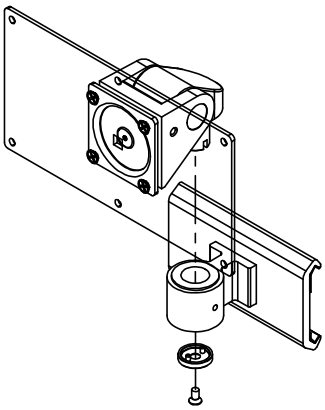	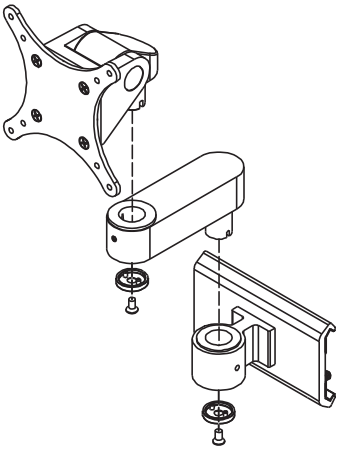	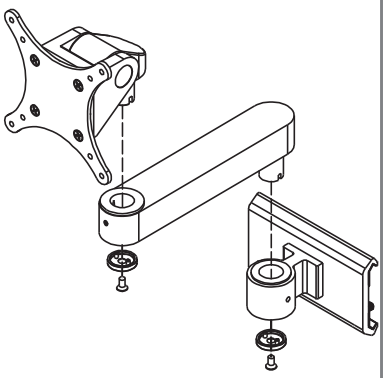
Max Payload 24lbs	Max Payload 24lbs	Max Payload 16lbs	Max Payload 11lbs

Appendix A: Slider Weight Limits (continued)

Due to the geometry of the ViewTrack and the location of it's pre-drilled holes, it is critical that the track payload not exceed the maximum specified linear weight limit. Overloading the track can cause damage to the wall and ViewTrack components.

MAXIMUM LOADING AND LATERAL SPACING MINIMUMS OF VIEWTRACK SLIDER OPTIONS*				
SLIDE MOUNT STYLE	**PART NUMBER**	**REACH****	**SPACING** (SEE IMAGE BELOW)	**MAXIMUM PAYLOAD**
Flush Mount	A309, A310	2.25"	8" (Center-To-Center)	35 Pounds*
Monolok	A271, A272, A273	2.75"	8" (Center-To-Center)	35 Pounds*
RCVR + Tilter	HVT001	6.25"	12" (Center-To-Center)	24 Pounds*
RCVR + Tilter + HE35	HVT001, HVT002	9.25"	12" (Center-To-Center)	16 Pounds*
RCVR + Tilter + HE35 + HE35	Call/Email to Order	13.25"	12" (Center-To-Center)	11 Pounds*
RCVR + Tilter + HE70	Call/Email to Order	13.25"	12" (Center-To-Center)	11 Pounds*

*If payload exceeds 2" of depth, contact Ergomart for a re-calculated maximum based on the specific geometry of your payload.
**Distance from wall or mounting surface to VESA plate mounting plane.

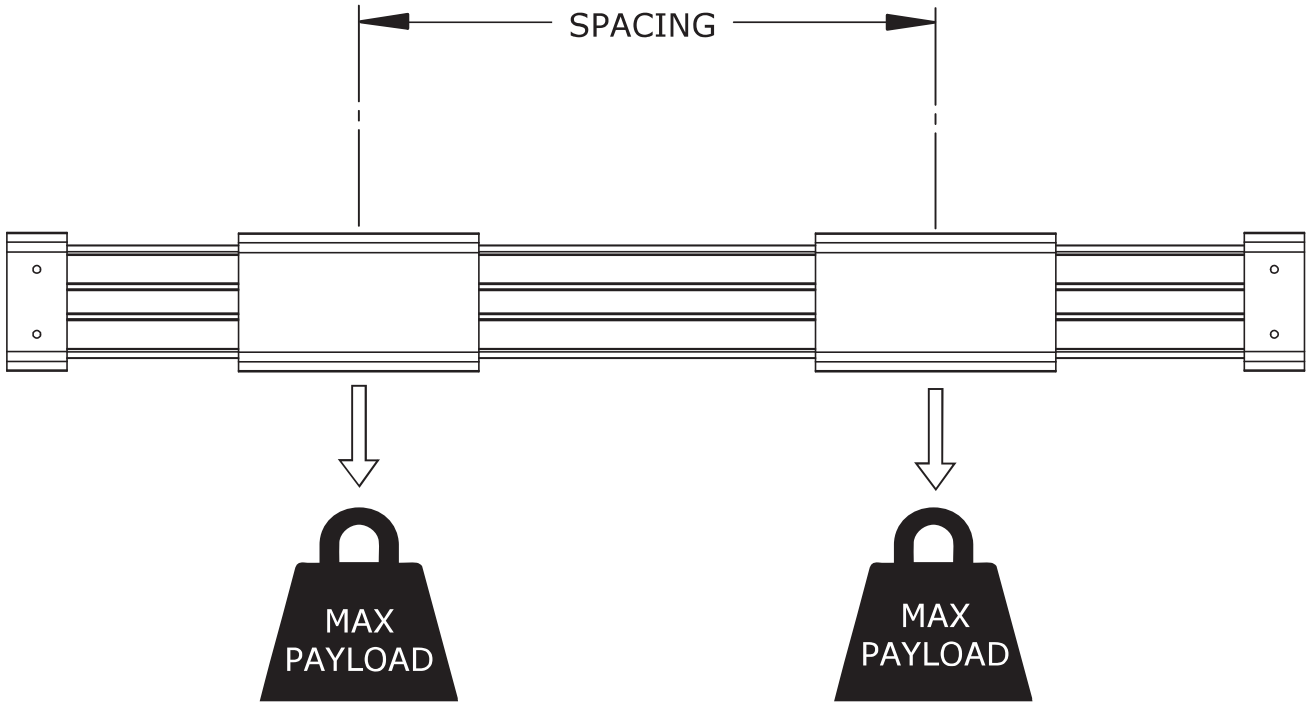

Appendix B

ADDRESSING MINOR WALL WARPING USING ERGOMART 0.030” SHIMS

B.1

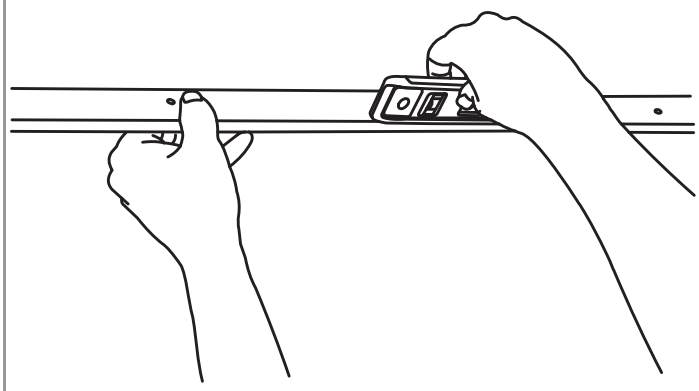

Hold the ViewTrack along its edge in the center of the planned mounting location. Use a level to position rail horizontally.

B.2

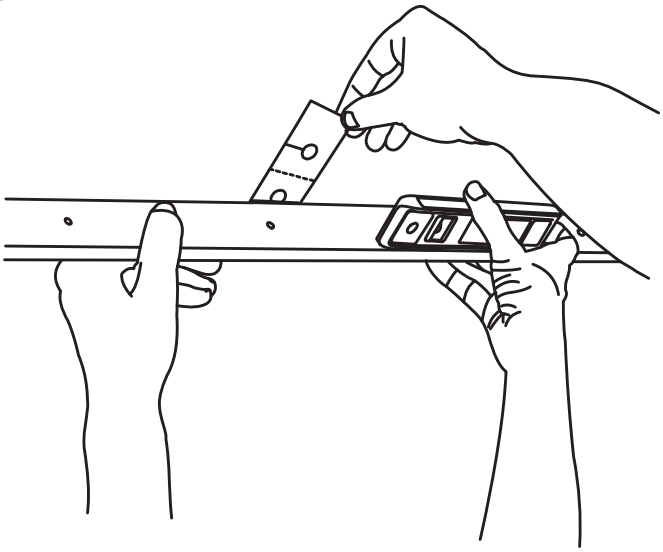

If using Ergomart .03” shims, determine the number of shims required per hole location. Depressions or elevated surfaces that require more than .25” of shimming (8 shim cards) are not suitable as mounting surfaces for ViewTracks.

B.3

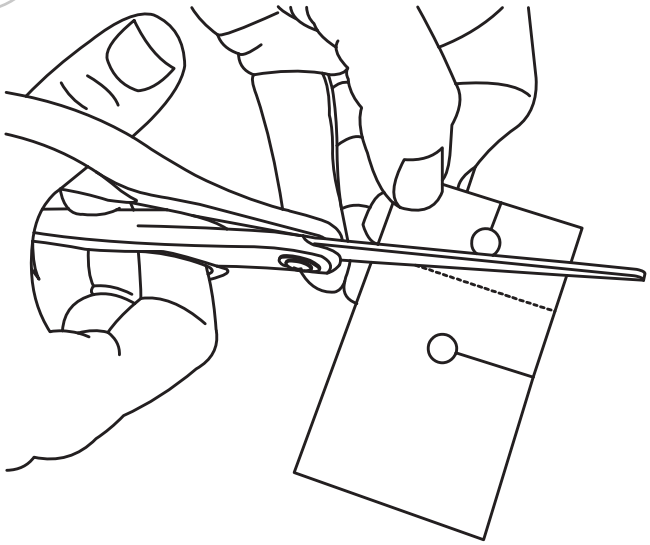

If the bottom screw hole position requires shims, cut along dashed line to remove excess material. The shorter shim will not hang below the lower end of the M-Track.

B.4

Return to STEP 3

WARNINGS - TERMS & CONDITIONS

- Carefully read and understand warnings and instructions before assembly and/or installation.
- Check all local codes and ordinances regarding mounting locations and fastening methods.
- Local codes may supersede Ergomart instructions.
- Always retain warning statements and instructions for future reference.
- Ensure all product users read and understand the User Safety Precautions and the instructions for safe and proper usage.
- Contact Ergomart service at 888 420 3200 with any questions prior to installation.
- Installation of this product requires basic mechanical skills and aptitudes and should never be undertaken by someone uncertain about the terms and procedures described in the accompanying instructions for safe use and installation.
- Use only correct tools and serviceable equipment to ensure personal safety and to prevent damage to components, fasteners and product.
- Determine the load capacity of the wall, ceiling, member, surface or structure you intend to use before installation. Consult a professional installer, Ergomart technical support or an engineer if the material to which you plan to attach is not specifically described in the installation manual.
- Never alter products or assemble in a fashion not described within the instructions without consulting an installation professional, engineer or Ergomart technical support at 888 420 3200.
- Never exceed the Maximum Load for any device or component. If you are unsure about any weight rating on any given component within a modular system provided by Ergomart, contact Ergomart service at 888 420 3200.
- Never introduce or add additional components into an existing modular system without consulting Ergomart technical support at 888 420 3200.
- Never attempt to open, service or disassemble any Ergomart component where no written Ergomart instructions are available for disassembly and repair.
- Never use harsh chemicals or abrasives to clean Ergomart products. Use mild, dilute cleaners and test before widespread use on an inconspicuous location or surface.
- Use best practices before and during installation:
    - Always use the correct tool for the specified procedure or job.
    - Always use assistance and lifting devices wherever indicated within the instructions.
    - Avoid shortcuts and always measure twice before drilling, cutting or changing things that cannot be altered.
    - When penetrating walls or surfaces, determine that no wiring, gas, ductwork or plumbing exist beneath the surface.
    - Consult an installation professional, facility manager or engineer before starting an installation project involving materials with properties that are not evident from experience or described as acceptable medium for attachment within the Ergomart documentation.

For more information, please visit
www.ergomart.com/terms

